# BANDSAW

## 18-IN

# Instruction Manual

## IMPORTANT

For your safety, read instructions carefully before assembling or using this product. Save this manual for future reference.

Original Instruction
V.1-201306

**HEALTH AND SAFETY GUIDELINES**

Always follow the instructions provided with the manual. Always wear safety glasses when using woodworking equipment. Always disconnect the power before adjusting any equipment. Failure to observe proper safety procedures and guidelines can result in serious injury.

**WARNING:** Do not allow familiarity (gained from frequent use of your machine and accessories) to become commonplace. Always remember that a careless fraction of a second is sufficient to inflict severe injury.

Always wear safety glasses when using woodworking equipment.

Always read the instructions provided before using woodworking equipment.

# INDEX

1 GENERAL INFORMATION
1.1 FOREWORD
1.2 MACHINE IDENTIFICATION
1.3 CUSTOMER SERVICE RECOMMENDATIONS

2 SAFETY PRECAUTIONS
2.1 SAFETY REGULATIONS
2.2 RESIDUAL RISKS
2.3 SAFETY AND INFORMATION SIGNALS

3 SPECIFICATIONS
3.1 MAIN COMPONENTS
3.2 TECHNICAL SPECIFICATION
3.3 ELECTRICAL CONNECTION
3.4 NOISE LEVEL
3.5 DUST EXTRACTION

4 INSTALLATION
4.1 INSTALLATION ZONE CHARACTERISTIC
4.2 INSTALL OF LOOSE PARTS - INTRODUCTION

5 ADJUSTMENT AND OPERATION
5.1 SETTING TABLE SQUARE TO BLADE
5.2 TILTING THE TABLE
5.3 TRACKING BLADE AND ADJUSTING BLADE TENSION
5.4 ADJUST THE BLADE GUIDE
5.5 CHANGE BLADE SPEED

6 TROUBLE SHOOTING

7 DIAGRAMS AND COMPONENTS

# 1. GENERAL INFORMATION

## 1.1 FOREWORD

Some information and illustrations in this manual may difer from the machine in your possession, since all the configurations inherent in the machine complete with all the optionals are described and illustrated. Therefore, refer only to that information strictly connected with the machine configuration you have purchased.

With this manual we would like to provide the necessary information for maintenance and proper use of the machine. The distribution network is at your service for any technical problem, spare parts or any new requirement you may have for the development of your activity.

This manual must be read and understood before operating the machine. This will provde a better working knowledge of the machine, for increased safety and to obtain the best results.

To facilitate its reading, the manual has been divided into sections pointing out the most important operations. For a quick research of the topics, it is recommended to consult the index. To better stress the importance of some basic passages, they have been marked by some preceding symbols:

**WARNING** Indicates imminent risks which may cause serious injury to the operator or other persons. Be careful and scrupulously follow the instructions.

**CAUTION** A statement advising of the need to take care lest serious consequences result in harm to material items such as the asset or the product.

## 1.2 MACHINE IDENTIFICATION

There is a identification plate fixed to the machine, containing the manufacturer's data, year of construction, serial number and technical specifications.

## 1.3 CUSTOMER SERVICE RECOMMENDATIONS

Apply the machine to skilled and authorized technical staff to carry out any operation dealing with parts disassembly. Keep to the instructions contained in this manual for the correct use of the machine.

**CAUTION** Only skilled and authorized staff shall use and service the machine after reading this manual. Respect the accident prevention regulations and the general safety and industrial medicine rules.

# 2. SAFETY PRECAUTIONS

## 2.1 SAFETY REGULATIONS

**WARNING** Read carefully the operation and maintenance manual before starting, using, servicing and carrying out any other operation on the machine.

The manufacturer disclaims all responsibilities for damages to persons or things, which might be caused by any failure to comply with the safety regulations.

- The machine operator shall have all necessary prerequisites in oder to operate a complex machiery.
- It is prohibited to use the machine when under the influence of alcohol, drugs or medication.
- All the operators must be suitably trained for use, adjustment and operation of the machine.
- The operators must carefully read the manual paying particular attention to the warning and safety notes. Furthermore, they must be informed on the dangers associated with use of the machine and the precautions to be taken, and must be instructed to periodically inspect the guards and safety devices.
- Before carrying out adjustment, repair or cleaning work, disconnect the machine from the electric power by setting the main switch to stop.
- After an initial bedding-in period or many hours of operation, the driving belts may slacken; this causes an increase in the tool stopping time (the stopping time must be less than 10 seconds). Immediately tighten them.
- The working area around the machine must be kept always clean and clear, in order to have an immediate and easy access to the switchboard.
- Never insert materials which are different from those which are prescribed for the machine utilization. The material to be machined must not contain any metal parts.
- Never machine pieces which may be too small or too wide ithrespect to the machine capacity.
- Do not work wood which has evident defects (cracks, knots, metal parts, etc.)
- Never place hands among the moving parts and/or materials.
- Keep hands clear from the tool; feed the piece with the aid of a pusher.
- Keep the tools tidy and far away from those not authorized persons.
- Never employ cracked nor uckled, neither not correctlyreground tools.
- Never use the tools beyond the speed limit recommended bythe producers.
- Carefully clean the rest surfaces of tools and make surethat they find perfectly horizontally positioned, and with no dents at all.
- Always wear gauntlets when handling the tools.
- Mount the tools in the right machining direction.
- Never start the machine before having correctly installed all the protections.
- Connect the dust suction hoods to an adequate suction system; suction must always be activated when the machine is switched on.
- Never open doors or protections when the machine or the system is operating.
- Many unpleasant experiences have shown that anybody may wear objects which could cause serious accidents. Therefore, before starting working, take any bracelet, watch or ring off.
- Button the working garment sleeve well around the wrists.
- Take any garment off which, by hanging out, may get tangled in the MOVING UNITS.
- Always wear strong working footwear, as prescribed by the accident-prevention regulations of all countries.
- Use protection glasses. Use appropriate hearing protection systems (headsets, earplugs, etc.) and dust protection masks.

- Never let unauthorized people repair, service or operate the machine.
- The manufacturer is not responsible for any damage deriving from arbitrary modifications made to the machine.
- Any transport, assembly and dismantling is to be made only by trained staff, who shall have specific skill for the specified operation.
- The operator must never leave the machine unattended during operation.
- During any working cycle break, switch the machine off.
- In case of long working cycle breaks, disconnect the general power supply.

## 2.2 RESIDUAL RISKS

Despite observance of all the safety regulations, and use according to the rules described in this manual, residual risks may still be present, among which the most recurring are:

- contact with tool
- contact with moving parts (belts, pulleys, etc..)
- recoil of the piece or part of it
- accidents due to wood splinters or fragments
- tool insert ejection
- electrocution from contact with live parts
- danger due to incorrect tool installation
- inverse tool rotation due to incorrect electrical connection
- danger due to dust inhalation in case of working without vacuum cleaner.

Bear in mind that the use of any machine tool carries risks.
Use the appropriate care and concentration for any type of machining (also the most simple).
**The highest safety is in your hands.**

## 2.3 SAFETY AND INFORMATION SIGNALS

This signals may be applied on the machine; in some cases they indicate possible danger conditions, in others they serve as indication.
Always take the utmost care.

SAFETY SIGNALS:

Risk of eye injury. Wear eye protection.

Wear hearing protection systems.

Danger of electric shock. Do not access the area when the machine is powered.

Carefully read and understand the manual before using the machine.

INFORMATION SIGNALS:
Indicate the technical characteristics, direction of rotation and inclination, block and release, etc.
Carefully following the directions to simply the use and adjustment of the machine.
The signals are graphically described and do not require further explanation.

# 3. SPECIFICATIONS

## 3.1 MAIN COMPONENTS

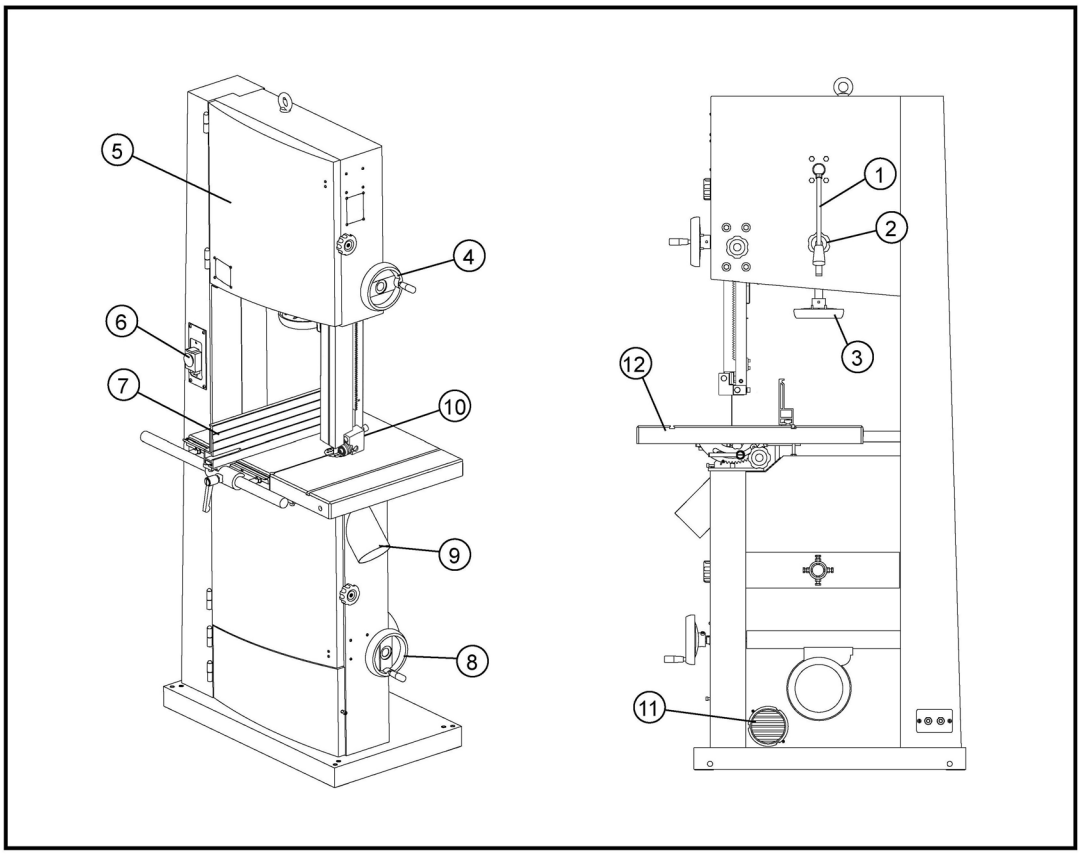


1 - Quick release rod
2 - Blade tracking knob
3 - Blade tension handwheel
4 - Guard lifting handwheel
5 - Upper door
6 - Switch
7 - Rip fence assembly
8 - Belt tension handwheel
9 - Dust port
10 - Upper guide
11 - Bottom dust port
12 - Table

## 3.2 TECHNICAL SPECIFICATION

| SPECIFICATION | MBS500 | | |
|---|---|---|---|
| Motor Voltage | 230V/50HZ | 400V/50HZ | 120V/240V/60HZ |
| Motor power | 1.5kW, S1 | 2.1kW, S1 | 2HP, S1 |
| Blade length | 3607mm | 3607mm | 142" |
| Blade width | 6 - 30mm | 6 - 30mm | 1/4" - 1-1/4" |
| Max. cut depth | 285mm | 285mm | 11-1/4" |
| Throat width | 465mm | 465mm | 18-1/4" |
| Blade speed | 380/820 m/min | 380/820 m/min | 1510/3220FPM |
| Table size | 535x485mm | 535x485mm | 21"x19" |
| Table tilt | 0~45° | 0~45° | 0~45° |
| Dust port diameter | 100mm | 100mm | 4" |

## 3.3 ELECTRICAL CONNECTION

- Electrical installation should be carried out by competent, qualified personnel.
- The mains connection should be made using the terminal box.
- Replacement of the power supply cable should only be done by a qualified electrician.

**WARNING**

To avoid electrocution or fire, any maintenance or repair to electrical system should be done only by qualified electricians using genuine replacement parts.

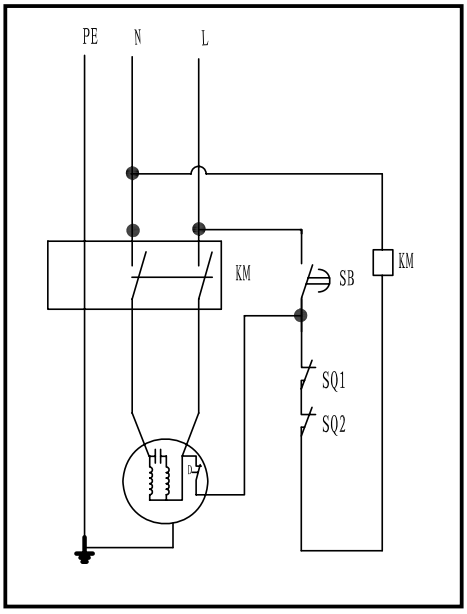


230V/50HZ

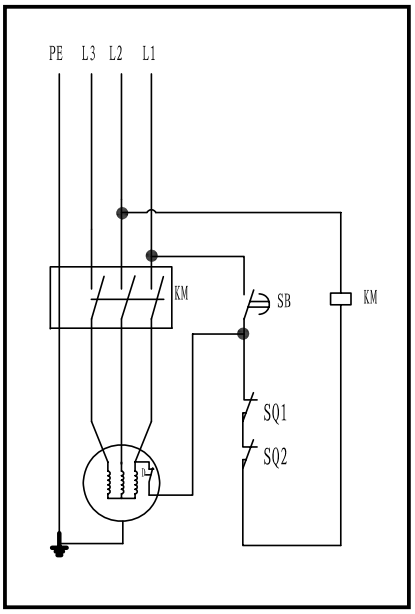


400V/50HZ

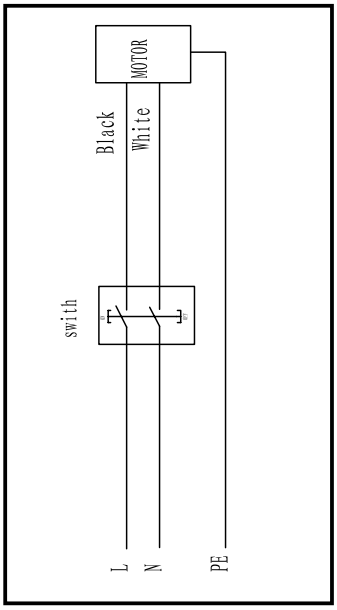


120V/240V/60HZ

## 3.4 NOISE LEVEL

| | No load | Load |
|---|---|---|
| Sound Pressure Level | < 80dB(A) | < 90dB(A) |
| Sound Power Level | < 90dB(A) | < 100dB(A) |

The noise levels measured are emission levels and not necessarily the safe working level. Although there is a correlation between the emission levels and the exposure levels, this cannot be used reliably to determine whether or not further precautions are required. The factors which affect the actual level of operator exposure include the duration of exposure, the ambient characteristics and other sources of emission, for example, the number of machines and other adjacent machining. The permitted exposure values may also vary from country to country. Nevertheless, this information allows the user of the machine to better evaluate the dangers and risks.

Other factors which reduce exposure to noise are:
- correct tool choice
- tool and machine maintenance
- use of hearing protection systems (e.g. headsets, earplugs,...)

**WARNING** Please use the hearing protection systems if the above mentioned noise levels exceed 95dB(A).

## 3.5 DUST EXTRACTION

If this band saw is operated indoors it is recommended to have it connected to a dust collector. The suction connector, supplied with the machine, has to be fitted to the dust ejection port of the saw for this purpose. The diameter of the suction connector is 100mm (4”).

- Workmen working in operations processing oak or beech timber where found to develop more often cancer of the mucous membrane of the nose (adenocarciome of the inner nose) then other workers.

- Experience shows that skin contact with oak or beech dust does not cause cancer

**WARNING** Wood dust and chips, together with an ignition source and the oxygen in the ambient air, can cause fires and explosions, injuries and allergies.

# 4. INSTALLATION

## 4.1 INSTALLATION ZONE CHARACTERISTICS

**WARNING**

It is prohibited to install the machine in explosive environments.

The installation zone must be selected evaluating the work space required depending on the dimension of the pieces to be machined,and taking into account that a free space of at least 800 mm must be left around the machine.It is also necessary to check The floor capacity and its surface, so that the machine base is evenly resting on its four supports.A power outlet and a chip-suction system connection shall be closeto the selected machine setting and it must be conveniently lighted.

## 4.2 INSTALL OF LOOSE PARTS - INTRODUCTION

A few elements will be disassembled from the machine main structure due to packaging and shipping requirements. These loose parts should be installed as follows.

**WARNING**

Please tighten all bolts and nuts absolutely. Otherwise, may cause machine wobble or serious injury to the operator or other persons.

### 4.2.1 FITTING WORKING TABLE

- With the help of another person, lift the working table onto the trunnion.
- Mount the working table to the trunnion using the supplied (4) hex bolts and (4) washers.
- Using hex soket screw 1, washer 2 and leveling plate A for the working table flatness.
- Install the fence guide rail B and the fence scale C as the pictures shown.

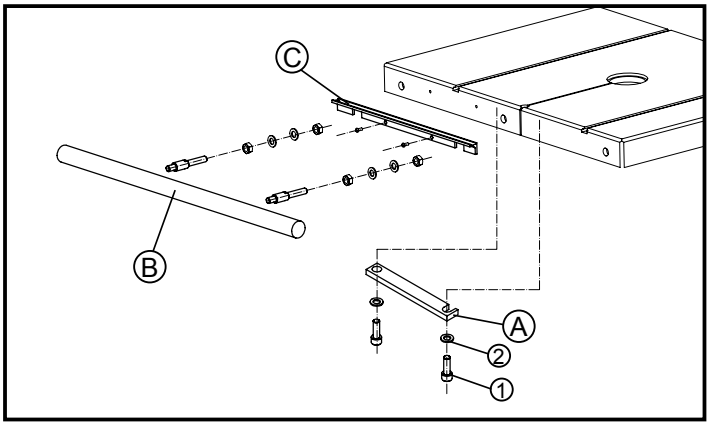


Fig.4.2.1

## 4.2.2 INSTALL RIP FENCE

- Install the rip fence as the picture shown, then set the fence block A along the guide rail B-Fig.4.2.1.

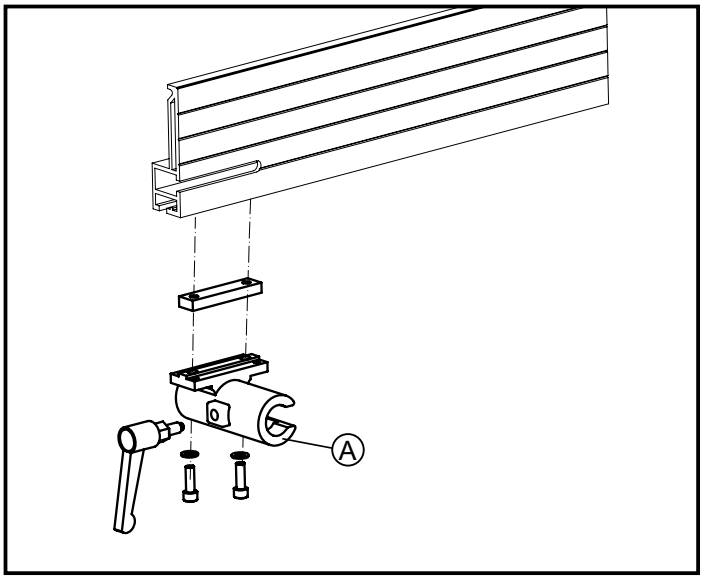


Fig.4.2.2

## 4.2.3 FITTING CRANK HANDLE

- Attach the big crank handle A,B separately to the frame as the picture shown.

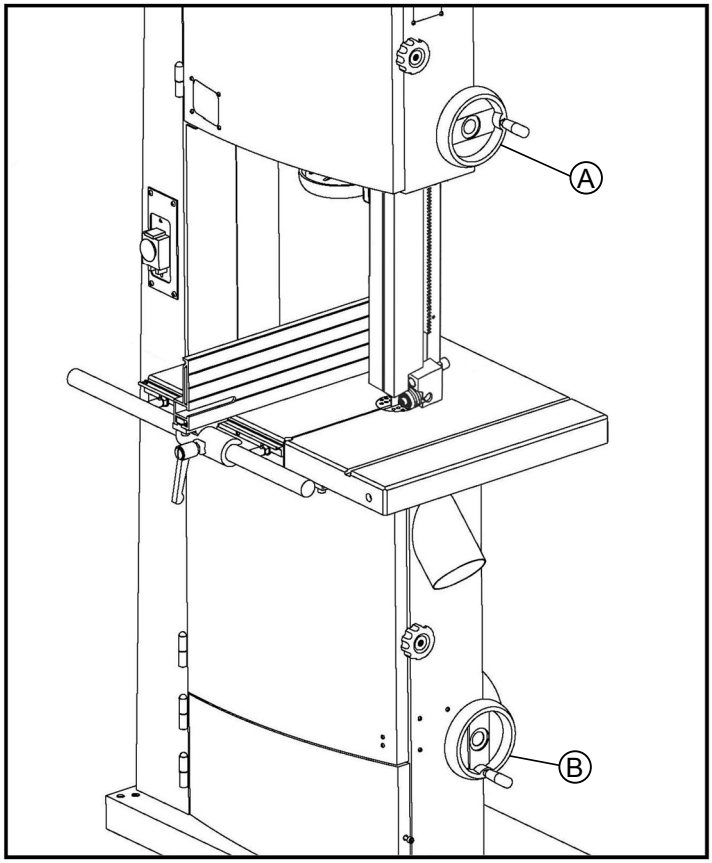


Fig.4.2.3

# 5. ADJUSTMENT AND OPERATION

**WARNING**

Handle the tools with protective gloves.

## 5.1 SETTING TABLE SQUARE TO BLADE

The table may be set at 90degree to the blade by adjusting the table stop screw under the table. The table stop screw rests on the top of the lower wheel bandwheel housing. By first slackening the locking nut A and then adjusting the screw B, the table can be set correctly. Retighten the locking nut A making sure that the setting is maintained.

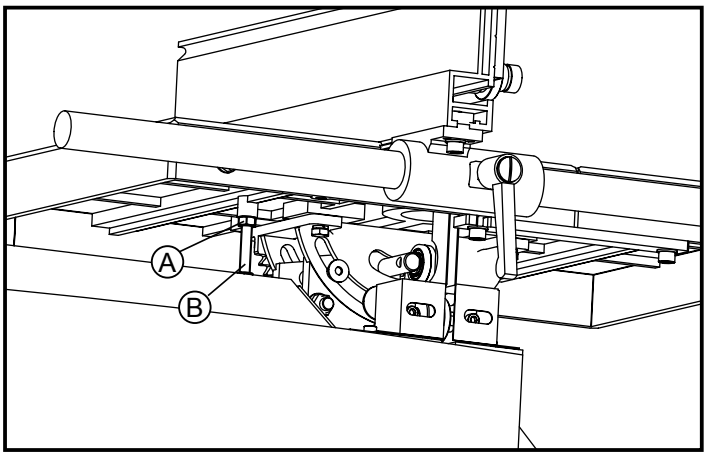


Fig.5.1

## 5.2 TILTING THE TABLE

- Loosen the lock handle A on the table trunnion.
- Turn the table tilting knob B to adjust the table to the desired angle. Use the angle indicator scale on the trunnion bracket to find the desired angle.
- Retighten the lock handle to secure the table.

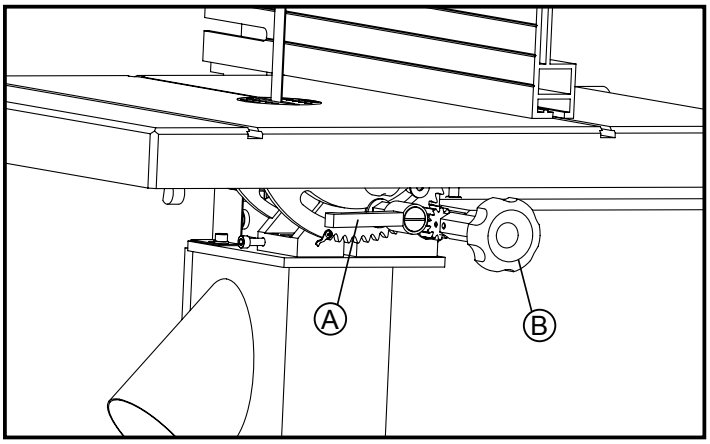


Fig.5.2

## 5.3 TRACKING BLADE AND ADJUSTING BLADE TENSION

- Firstly, make sure the upper and lower blade guides are adjusted away from the blade and the tension scale reading corresponds to the width blade you are using.
- Then loosen the lock lever A by turning it counterclockwise and turn the blade tracking knob B clockwise/conterclockwise while turning the upper wheel by hand at least three rotations until the blade tracks centered on the wheel. Finally, tighten the lock lever and close the doors.

- To loosen the tension of the blade, turn the blade tension handwheel C counterclockwise.
- To tighten the tension of the blade, turn the blade tension handwhee.
- Tesnion the blade until the tension readings corresponds to the width of blade you are using.

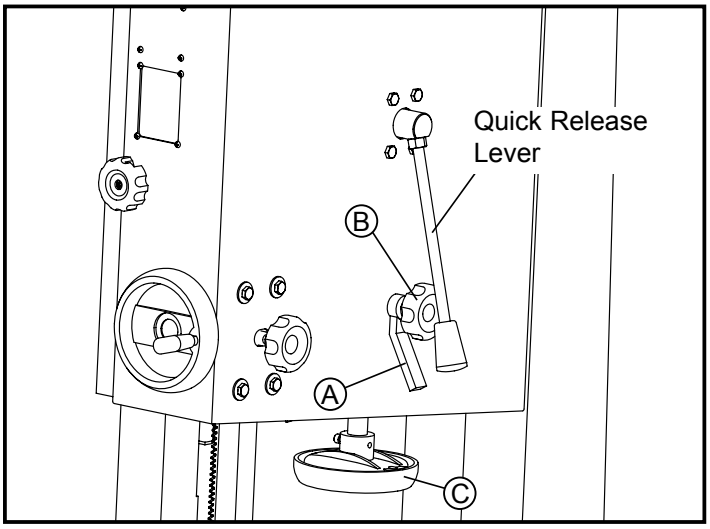


Fig.5.3

## 5.4 ADJUST THE BLADE GUIDE

To adjust the upper blade guides, first position the roller guides relative to the blade by slackening off the hex nut A and moving the guide carrier until the roller guides are approx. 1/16" behind the gullets of the blade. Next set the roller guides to within 1/32" of the blade by releasing the screw B on each side of the blade. Do not set the guides too close as this will adversely affect the life of the blade. Finally, adjust the thrust bearing to be just clear of the back of the blade by unlocking the hex nut C. When the correct adjustment is reached, lock the thrust bearing in position with the hex nut A.

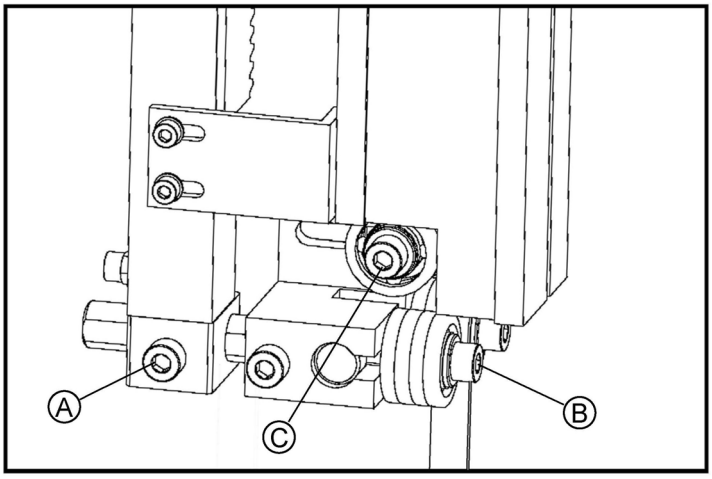


Fig.5.4

## 5.5 CHANGE BLADE SPEED

- This bandsaw has two blade speed, lowe speed and high speed.
- The lower wheel A has two, intergral, multi-vee form pulleys and the motor shaft has a twin multi-vee form pulley B.
- The multi-vee belt C passes around the wheel pulley and the motor pulley. The belt tension is released and applied by using the cranked handle D.
- For the high speed, the belt should be fitted to the rear pulley on both the motor and wheel.
- For the low speed, the belt should be fitted to the front pulley on both the motor and wheel.

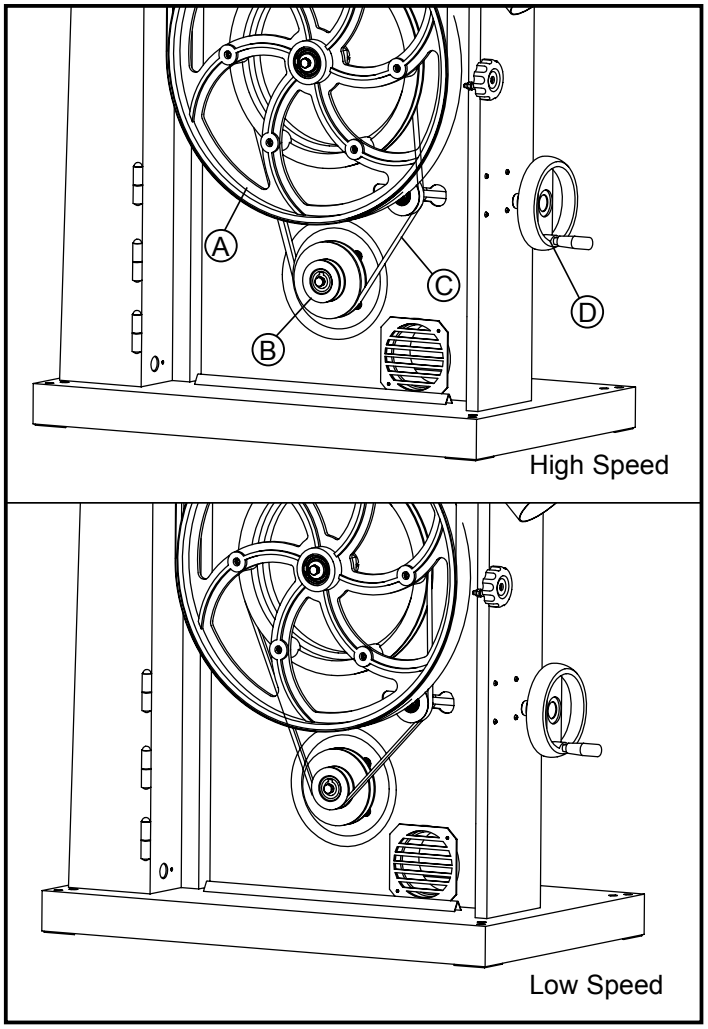


Fig.5.5

# 6. TROUBLE SHOOTING

**WARNING**

- For any information or problem contact your area dealer or our technical service center. The necessary interventions must be carried out by specialised technical personel.
- Before carrying out any fault service or maintenance work, please always TRUN OFF THE SWITCH, UNPLUG POWER CABLE, WAIT FOR SAW BLADE TO COME TO STANDSTILL.

| Trouble | Possible Cause | Solution |
|---|---|---|
| **Saw stops or will not start** | 1. Saw unplugged<br>2. Fuse blown or circuit breaker tripped<br>3. Cord damaged | 1. Check plug connections<br>2. Replace fuse or reset circuit breaker<br>3. Replace cord |
| **Does not make accurate 45° or 90° cuts** | 1. Stop not adjusted correctly<br>2. Angle pointer not set accurately<br>3. Miter gauge out of adjustment | 1. Check blade with square and adjust stop<br>2. Check blade with square and adjust pointer<br>3. Adjust miter gauge |
| **Blade wanders during cut** | 1. Fence not aligned with blade<br>2. Warped wood<br>3. Excessive feed rate<br>4. Incorrect blade for cut<br>5. Blade tension not set properly<br>6. Guide bearings not set properly | 1. Check and adjust fence<br>2. Select another piece of wood<br>3. Reduce feed rate<br>4. Change blade to correct type<br>5. Set blade tension according to blade size<br>6. Review guide bearing adjustment on pages 8 & 9 |
| **Saw makes unsatisfactory cuts** | 1. Dull blade<br>2. Blade mounted wrong<br>3. Gum or pitch on blade<br>4. Incorrect blade for cut<br>5. Gum or pitch on table | 1. Replace blade<br>2. Teeth should point down<br>3. Remove blade and clean<br>4. Change blade to correct type<br>5. Clean table |
| **Blade does not come up to speed** | 1. Extension cord too light or to long<br>2. Low shop voltage | 1. Replace with adequate size and length cord<br>2. Contact your local electric company |
| **Saw vibrates excessively** | 1. Base on uneven floor<br>2. Bad V-belt<br>3. Motor mount is loose<br>4. Loose hardware | 1. Reposition on flat, level surface<br>2. Replace V-belt<br>3. Tighten motor mount hardware<br>4. Tighten hardware |

# 7. DIAGRAMS & COMPONENTS

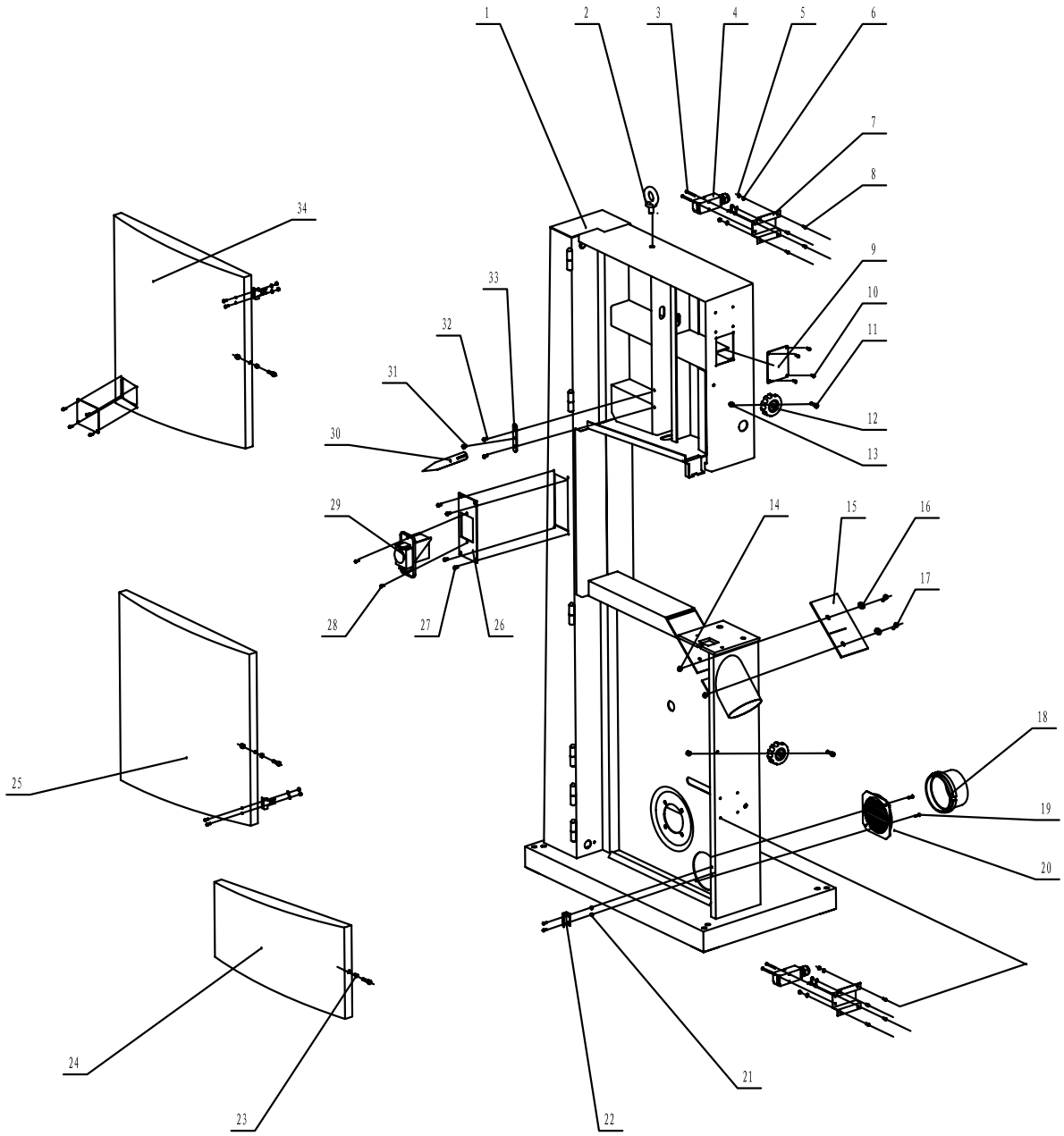


| No. | Description | Part No. | Qty. |
|---|---|---|---|
| 1 | Frame | 1-JL26011000M | 1 |
| 2 | Screw | 1-M12GB825Z | 1 |
| 3 | Screw | 1-M4X35GB818Z | 4 |
| 4 | Switch | 1-QKS8 | 2 |
| 5 | Nut | 1-M4GB6170Z | 12 |
| 6 | Washer | 1-WSH4GB97D1Z | 12 |
| 7 | Bracket | 1-JL26010012 | 2 |
| 8 | Screw | 1-M4X12GB818Z | 14 |
| 9 | Window | 1-JL26010001 | 2 |
| 10 | Rivet | 1-RVT3X7GB12618A | 8 |
| 11 | Screw | 1-M6X20GB70Z | 5 |
| 12 | Handle | 1-JL26010006-001S | 2 |
| 13 | Nut | 1-M6GB889Z | 2 |
| 14 | Nut | 1-M6GB6170Z | 2 |
| 15 | Plate | 1-JL26010013 | 1 |
| 16 | Washer | 1-WSH6GB96Z | 2 |
| 17 | Screw | 1-M6X16GB70Z | 2 |
| 18 | Dust port | 1-JL20010007-001S | 1 |
| 19 | Screw | 1-ST3D5X13GB845Z | 2 |
| 20 | Bracket | 1-JL20010019-001S | 1 |
| 21 | Nut | 1-M4GB889Z | 2 |
| 22 | Plate | 1-JL26010009 | 1 |
| 23 | Tube | 1-JL26010007 | 2 |
| 24 | Door | 1-JL26013000 | 1 |
| 25 | Door | 1-JL26014000A | 1 |
| 26 | Plate | 1-JL26010008B | 1 |
| 27 | Screw | 1-M5X12GB818Z | 4 |
| 28 | Screw | 1-M4X10GB818Z | 2 |
| 29 | Switch | 1-DZ07-16ZF/230V | 1 |
| 30 | Indicator | 1-JL26010004 | 1 |
| 31 | Screw | 1-JL26010010 | 1 |
| 32 | Screw | 1-M5X8GB818Z | 2 |
| 33 | Plate | 1-JL27010005 | 1 |
| 34 | Door | 1-JL26012000A | 1 |

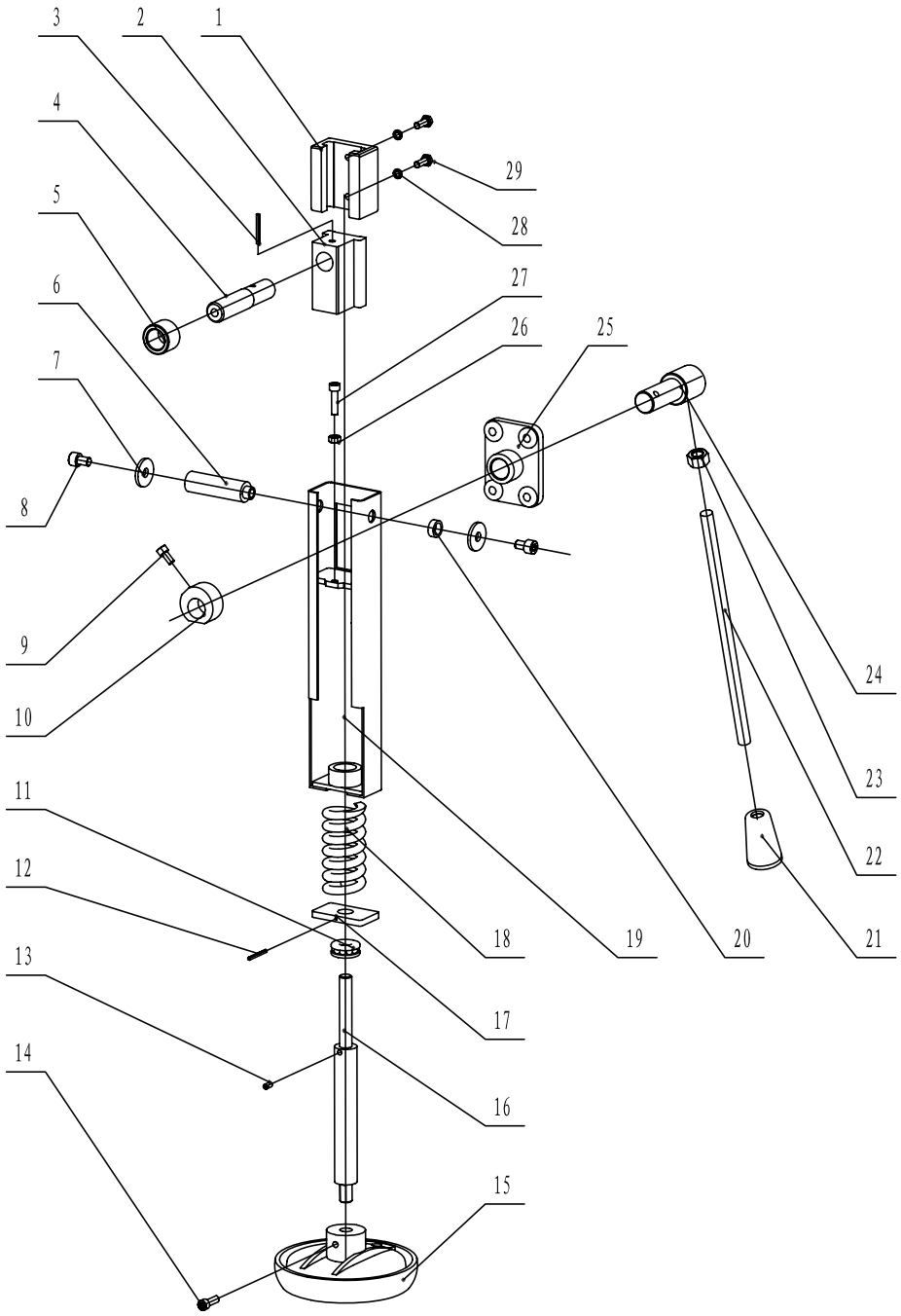


| No. | Description | Part No. | Qty. |
|---|---|---|---|
| 1 | Rail | 1-JL26030013 | 1 |
| 2 | Bracket | 1-JL26030009A | 1 |
| 3 | Pin | 1-PIN5X35GB879D1B | 1 |
| 4 | Shaft | 1-JL26020002A | 1 |
| 5 | Tube | 1-JL26030008 | 1 |
| 6 | Shaft | 1-JL26030001A | 1 |
| 7 | Washer | 1-WSH8GB5287Z | 2 |
| 8 | Screw | 1-M8X10GB70Z | 2 |
| 9 | Screw | 1-M6X20GB70D1Z | 1 |
| 10 | Tube | 1-JL26030007 | 1 |
| 11 | Bearing | 1-BRG51201GB301 | 1 |
| 12 | Pin | 1-PIN2D5X16GB879B | 1 |
| 13 | Screw | 1-M5X12GB73B | 1 |
| 14 | Screw | 1-M6X20GB70D1Z | 1 |
| 15 | Wheel | 1-JL26030012-001S | 1 |
| 16 | Rod | 1-JL26020013 | 1 |
| 17 | Plate | 1-JL26030010 | 1 |
| 18 | Spring | 1-JL26030011 | 1 |
| 19 | Bracket | 1-JL26031000A | 1 |
| 20 | Tube | 1-JL26030017A | 1 |
| 21 | Knob | 1-1904011 | 1 |
| 22 | Rod | 1-JL26030004 | 1 |
| 23 | Nut | 1-M12GB6170Z | 1 |
| 24 | Shaft | 1-JL26030005 | 1 |
| 25 | Bracket | 1-JL26030006 | 1 |
| 26 | Nut | 1-M6GB6170Z | 1 |
| 27 | Screw | 1-M6X25GB70D1Z | 1 |
| 28 | Washer | 1-WSH6GB93B | 2 |
| 29 | Bolt | 1-M6X12GB5783Z | 2 |

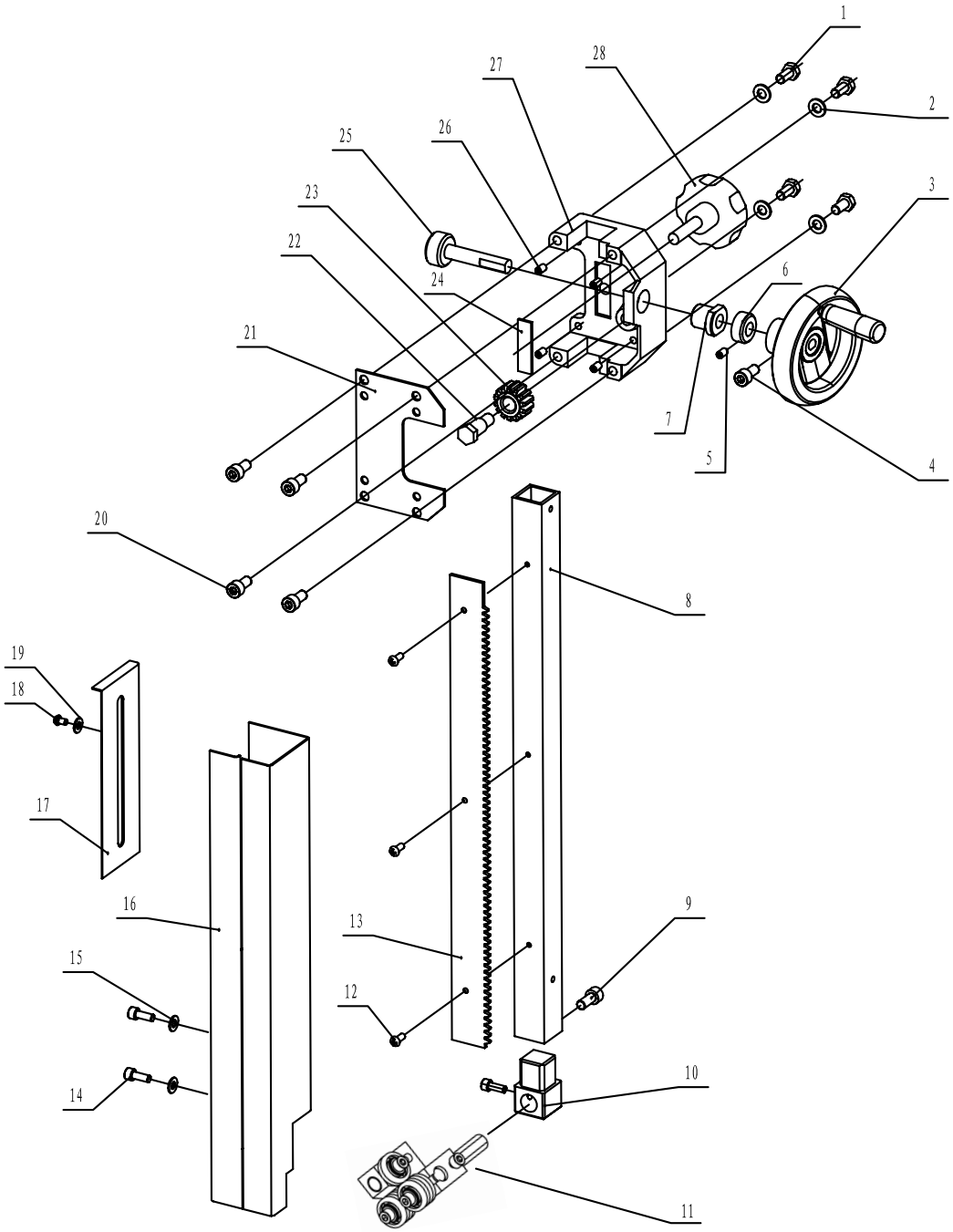


| No. | Description | Part No. | Qty. |
|---|---|---|---|
| 1 | Bolt | 1-M8X16GB5783Z | 4 |
| 2 | Washer | 1-WSH8GB96Z | 4 |
| 3 | Wheel | 1-JL26030012-001S | 2 |
| 4 | Screw | 1-M6X16GB70Z | 2 |
| 5 | Screw | 1-M5X8GB78Z | 2 |
| 6 | Washer | 1-CLP12GB884B | 1 |
| 7 | Tube | 1-JL26040003 | 1 |
| 8 | Rod | 1-JL26040009A | 1 |
| 9 | Scrw | 1-M6X12GB70Z | 2 |
| 10 | Bracket | 1-JL26041005A | 1 |
| 11 | Guider | 2-JL26041000 | 1 |
| 12 | Screw | 1-M4X10GB819Z | 3 |
| 13 | Rod | 1-JL26040001 | 1 |
| 14 | Screw | 1-M5X12GB70Z | 2 |
| 15 | Washer | 1-WSH5GB97D1Z | 2 |
| 16 | Blade guard | 1-JL26042000A-001Y | 1 |
| 17 | Plate | 1-JL26040010A-001Y | 1 |
| 18 | Screw | 1-M5X10GB818B | 1 |
| 19 | Washer | 1-JL26040011 | 1 |
| 20 | Screw | 1-M8X16GB70Z | 4 |
| 21 | End cap | 1-JL26040002 | 1 |
| 22 | Screw | 1-JL26040006 | 1 |
| 23 | Gear | 1-1501006 | 1 |
| 24 | Plate | 1-JL26040007 | 1 |
| 25 | Rod | 1-JL26040004 | 1 |
| 26 | Screw | 1-M6X12GB77Z | 4 |
| 27 | Bracket | 1-JL26040008 | 1 |
| 28 | Handle | 1-JL26040015-001S | 1 |

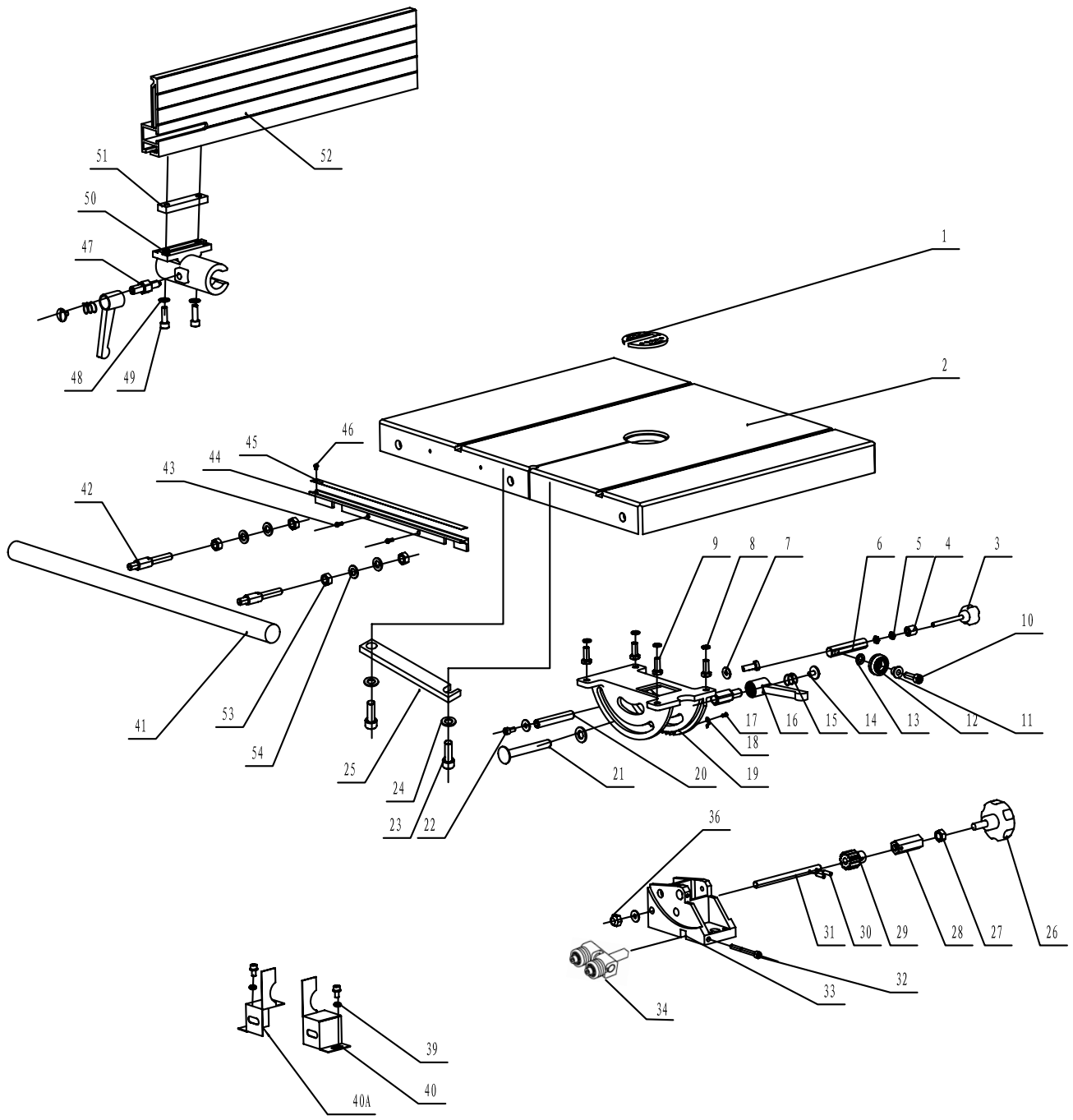


| No. | Description | Part No. | Qty. |
|---|---|---|---|
| 1 | Insert | 1-JL26050008-001S | 1 |
| 2 | Table | 1-JL26050001B-001G | 1 |
| 3 | Handle | 1-JL26052002A001S | 1 |
| 4 | Tube | 1-JL26052003 | 1 |
| 5 | Nut | 1-M6GB6172B | 2 |
| 6 | Bracket | 1-JL26052001A | 1 |
| 7 | Washer | 1-WSH6GB5287Z | 1 |
| 8 | Washer | 1-WSH8GB93Z | 4 |
| 9 | Bolt | 1-M8X16GB5783Z | 4 |
| 10 | Screw | 1-M8X25GB70Z | 1 |
| 11 | Tube | 1-JL26041006 | 1 |
| 12 | Bearing | 1-BRG180201GB278 | 1 |
| 13 | Washer | 1-WSH8GB97D1Z | 1 |
| 14 | Screw | 1-M6X10GB947B | 1 |
| 15 | Spring | 1-JL41031102 | 1 |
| 16 | Handle | 1-JL41031101 | 1 |
| 17 | Screw | 1-ST2D9X6D5GB845Z | 1 |
| 18 | Indicator | 1-JL26050005A | 1 |
| 19 | Trunnion | 1-JL26054100 | 1 |
| 20 | Shaft | 1-JL26050011 | 1 |
| 21 | Bolt | 1-M12X90GB801Z | 1 |
| 22 | Scrw | 1-M6X10GB70Z | 2 |
| 23 | Screw | 1-M8X20GB70Z | 2 |
| 24 | Washer | 1-WSH8GB97D1Z | 2 |
| 25 | Plate | 1-JL27050009 | 1 |
| 26 | Handle | 1-JL41031101 | 1 |
| 27 | Nut | 1-M10GB6170Z | 1 |
| 28 | Handle | 1-JL29052102 | 1 |
| 29 | Gear | 1-JL26054002 | 1 |
| 30 | Pin | 1-PIN4X18GB879B | 2 |
| 31 | Shaft | 1-JL26054001 | 1 |
| 32 | Screw | 1-M6X60GB70Z | 1 |
| 33 | Bracket | 1-JL26050004C | 1 |
| 34 | Guider | 1-JL26051000 | 1 |
| 36 | Nut | 1-M10GB889Z | 1 |
| 39 | Washer | 1-WSH6GB97D1Z | 2 |
| 40 | Blade guard | 1-JL26051003C | |
| 40A | Guard | 1-JL26051002C | |
| 41 | Rail | 1-JL26060001B | 1 |
| 42 | Shaft | 1-JL26060018 | 2 |
| 43 | Screw | 1-M4X15GB818Z | 2 |
| 44 | Base | 1-JL26060005 | 1 |
| 45 | Scale | 1-JL26060004B | 1 |
| 46 | Screw | 1-M4X4GB823Z | 1 |
| 47 | Rod | 1-JL26062001A | 1 |
| 48 | Washer | 1-WSH8GB97D1Z | 2 |
| 49 | Screw | 1-M8X25GB70Z | 2 |
| 50 | Bracket | 1-JL26060014A | 1 |
| 51 | Plate | 1-JL26060015A | 1 |
| 52 | Fence | 1-JL26060002C | 1 |
| 53 | Nut | 1-M10GB6170Z | 4 |
| 54 | Washer | 1-WSH10GB97D1Z | 4 |

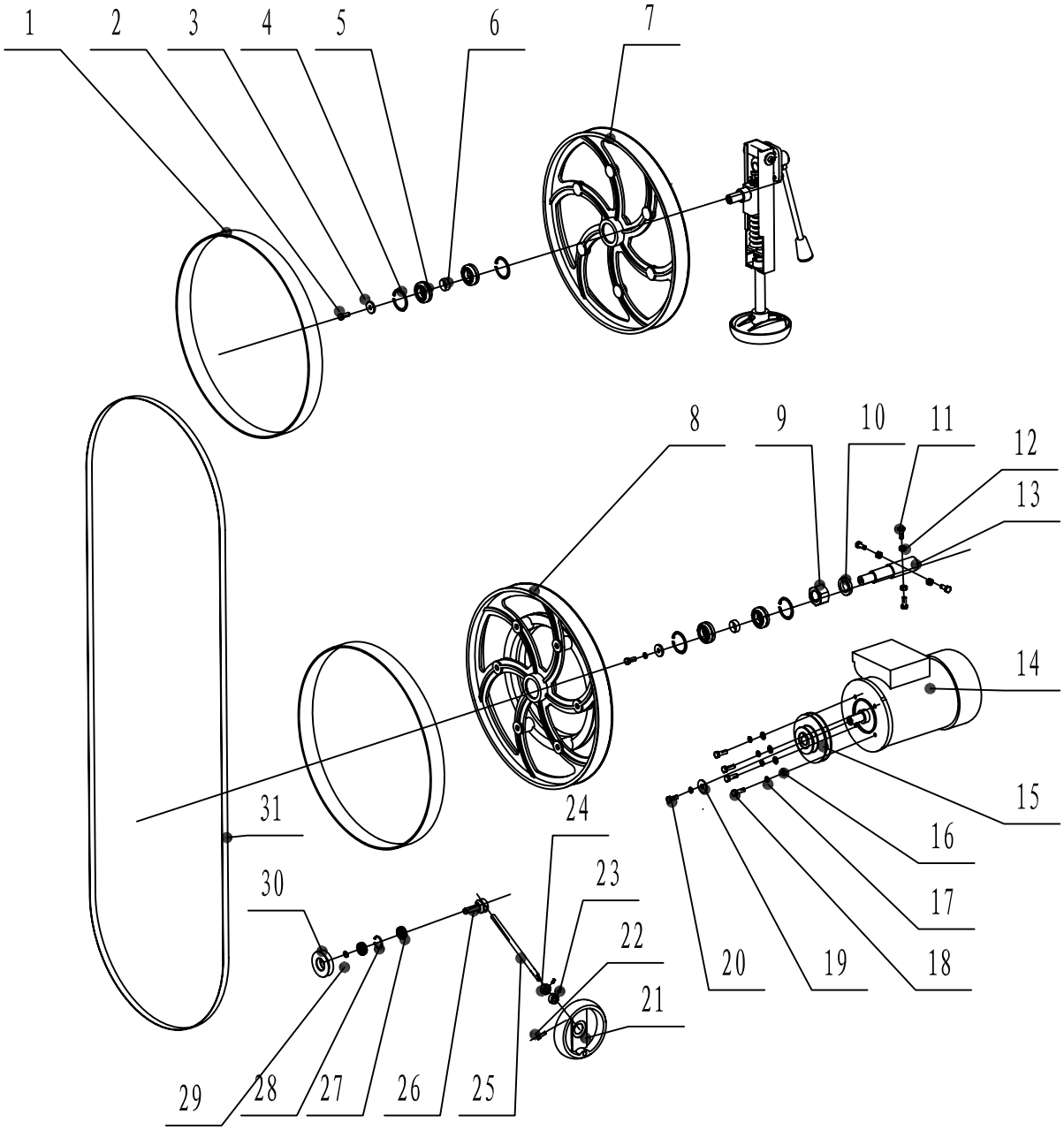


| No. | Description | Part No. | Qty. |
|---|---|---|---|
| 1 | Tyre | 1-JL26020003 | 2 |
| 2 | Screw | 1-M8X16GB70Z | 2 |
| 3 | Washer | 1-WSH8GB5287Z | 2 |
| 4 | Washer | 1-CLP47GB893D1B | 4 |
| 5 | Bearing | 1-BRG180204GB278D | 4 |
| 6 | Tube | 1-JL26010018-001S | 2 |
| 7 | Wheel | 1-JL26020001C | 1 |
| 8 | Lower wheel | 1-JL26022001C | 1 |
| 9 | Nut | 1-M27X2GB6171Z | 1 |
| 10 | Washer | 1-WSH27GB93Z | 1 |
| 11 | Bolt | 1-M8X16GB5783Z | 4 |
| 12 | Nut | 1-M8GB6170Z | 4 |
| 13 | Shaft | 1-JL26020007 | 1 |
| 14 | Motor | 1-KH8023584 | 1 |
| 15 | Pulley | 1-JL26020011 | 1 |
| 16 | Washer | 1-WSH8GB96Z | 4 |
| 17 | Washer | 1-WSH8GB93Z | 5 |
| 18 | Screw | 1-M8X16GB70D1Z | 4 |
| 19 | Washer | 1-WSH8GB5287Z | 1 |
| 20 | Bolt | 1-M8X20GB5783ZF | 1 |
| 21 | Wheel | 1-JL26020012-001S | 1 |
| 22 | Screw | 1-M6X12GB78Z | 1 |
| 23 | Ring | 1-CLP10GB884Z | 2 |
| 24 | Screw | 1-M5X8GB78Z | 2 |
| 25 | Rod | 1-JL26020013 | 1 |
| 26 | Shaft | 1-JL26020009 | 1 |
| 27 | Bearing | 1-BRG80101GB278 | 2 |
| 28 | Ring | 1-CLP28GB893D1B | 1 |
| 29 | Ring | 1-CLP12GB894D1B | 1 |
| 30 | Wheel | 1-JL26020008 | 1 |
| 31 | Blade | 1-RC26020004 | 1 |